MOSFETs Silicon 40V N-Channel MOS

Applications

- Synchronus Rectification
- Industrial and Motor Drive
- DC/DC and AC/DC Converters
- Power Tools
- BMS

Features

- High-Speed Switching
- Low $R_{DS(ON)}$
- Low Gate Charge
- RoHS and Halogen-Free Compliant
- 100% UIS and RG Tested

Product Summary

V_{DS}	40	V
I_D	610	A
$R_{DS(ON)}$,Typ@10V	0.6	mΩ
Q_g	172	nC

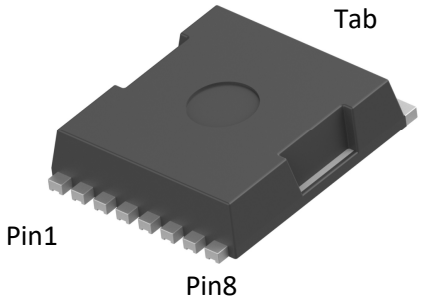

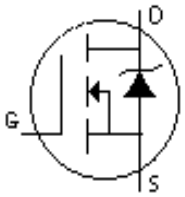

Gate: Pin1

Drain: Tab

Source: Pin2~8

TOLL

Marking	Package	Packaging	Min. package quantity
MT0D7R040SH	TOLL	Tape & Reel	2000

■ Absolute Maximum Ratings（Tc=25℃ unless otherwise noted)

Parameter			Symbol	Ratings	Unit
Drain-Source Voltage			V_{DS}	40	V
Gate-Source Voltage			V_{GS}	±20	V
Continuous Drain Current	Tc=25℃	(Note 1)	I_D	610	A
Continuous Drain Current	Tc=100℃	(Note 1)		385	A
Drain Current-Pulsed		(Note 1)	I_{DM}	1500	A
Total Dissipation			P_D	417	W
Junction Temperature			T_j	150	℃
Storage Temperature			T_{stg}	-55-150	℃
Single Pulse Avalanche Energy		(Note 2)	E_{AS}	1849	mJ

Note: Using continuously under heavy loads (e.g. the application of high temperature/current/voltage and the significant change in temperature, etc.) may cause this product to decrease in the reliability significantly even if the operating conditions (i.e. operating temperature/current/voltage, etc.) are within the absolute maximum ratings.

■ Thermal Characteristics

Parameter	Symbol	Max	Unit
Maximum Junction-to-Case	$R_{\theta JC}$	0.3	℃/W
Maximum Junction-to-Ambient	$R_{\theta JA}$	40	℃/W

Note 1：Ensure that the channel temperature does not exceed 150℃.

Note 2： Tch= 25℃(initial), L=0.5mH.

Note：This transistor is sensitive to electrostatic discharge and should be handled with care.

■ Electrical Characteristics（Tc=25℃ unless otherwise noted)

Parameter	Symbol	Test Condition	Min	Typ	Max	Unit
Static Parameters						
Drain-Source Breakdown Voltage	BV_{DSS}	V_{GS}=0V,I_D=250uA	40	-	-	V
Drain-Source Leakage Current	I_{DSS}	V_{DS}=40V,V_{GS}=0V	-	-	1	uA
Gate-Body Leakage Current	I_{GSS}	V_{GS}=±20V,V_{DS}=0V	-	-	±100	nA
Gate Threshold Voltage	$V_{GS(TH)}$	V_{GS}=V_{DS},I_D=250uA	2.0	3.0	4.0	V
Drain-Source On Resistance	$R_{DS(ON)}$	V_{GS}=10V,I_D=20A	-	0.6	0.7	mΩ
		Tj=125℃	-	0.87	-	
Dynamic Characteristics						
Input Capacitance	C_{iss}	V_{DS}=20V,V_{GS}=0V, f=1.0MHz	-	9608	-	pF
Output Capacitance	C_{oss}		-	9631	-	pF
Reverse Transfer Capacitance	C_{rss}		-	604	-	pF
Gate Resistance	R_g	V_{DS}=0V,V_{GS}=0V, f=1.0MHz	-	0.9	-	Ω
Switching Paramters						
Turn-On Delay Time	$t_{d(on)}$	V_{DS}=20V,I_D=20A, V_{GS}=10V	-	28	-	ns
Turn-On Rise Time	t_r		-	30	-	ns
Turn-Off Delay Time	$t_{d(off)}$		-	60	-	ns
Turn-Off Fall Time	t_f		-	26	-	ns
Total Gate Charge	Q_g	V_{DS}=20V,I_D=20A, V_{GS}=10V	-	172	-	nC
Gate-Source Charge	Q_{gs}		-	40	-	nC
Gate-Drain Charge	Q_{gd}		-	50	-	nC
Source-Drain Characteristics						
Diode Forward Voltage	V_{sd}	V_{GS}=0V, I_F=10A	-	0.7	1.2	V
Reverse Recovery Time	t_{rr}	V_R=20V,I_F=20A, di/dt=100A/us	-	185	-	ns
Reverse Recovery Charge	Q_{rr}		-	599	-	nC

■ Characteristics Curves

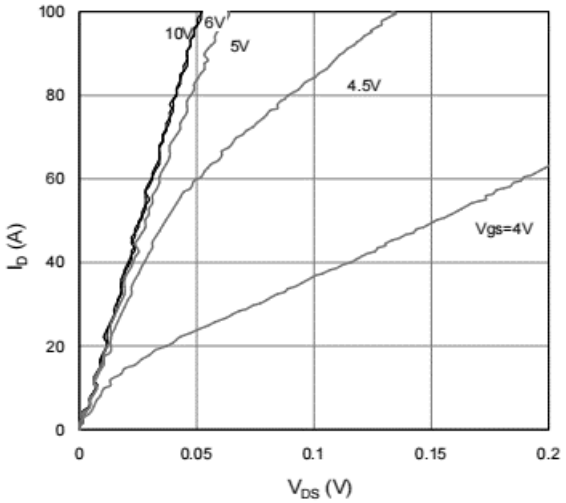

Output Characteritsics

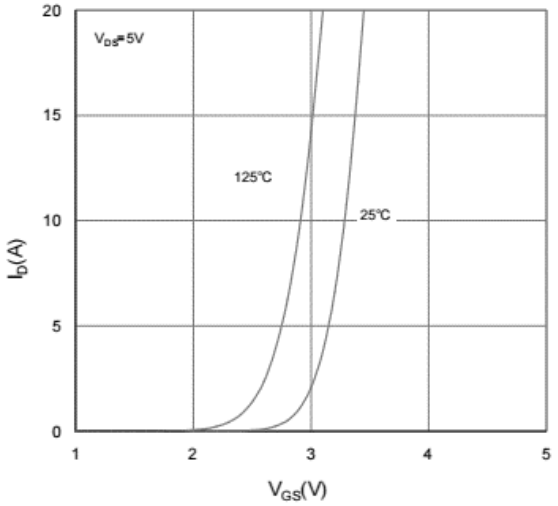

Transfer Characteritsics

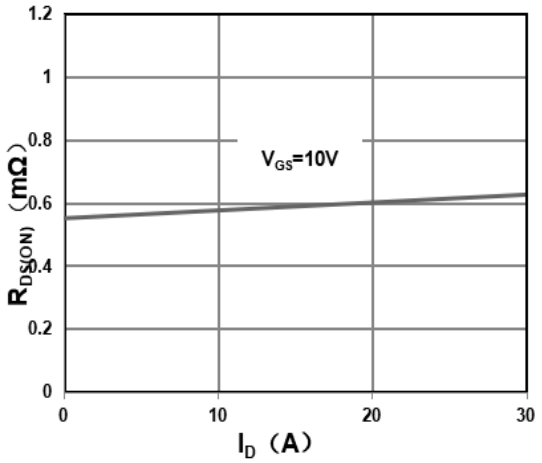

On Resistance Vs Drain Current

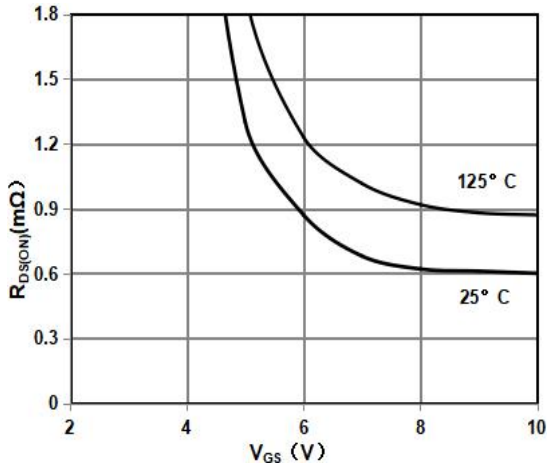

On Resistance Vs Gate Source Voltage

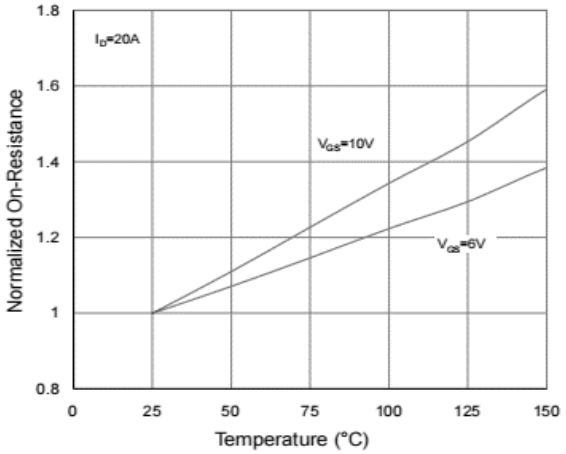

Rdson-JunctionTemperature

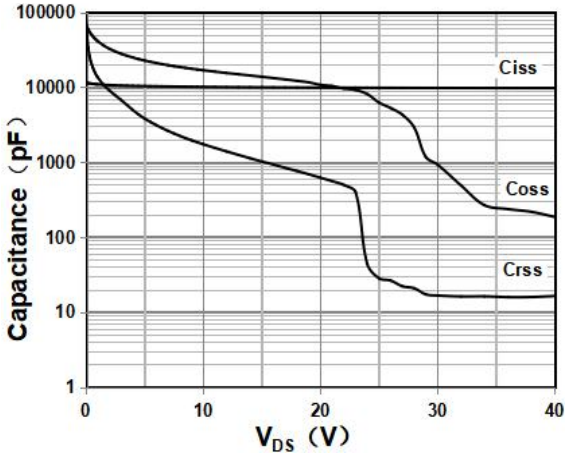

Capacitance

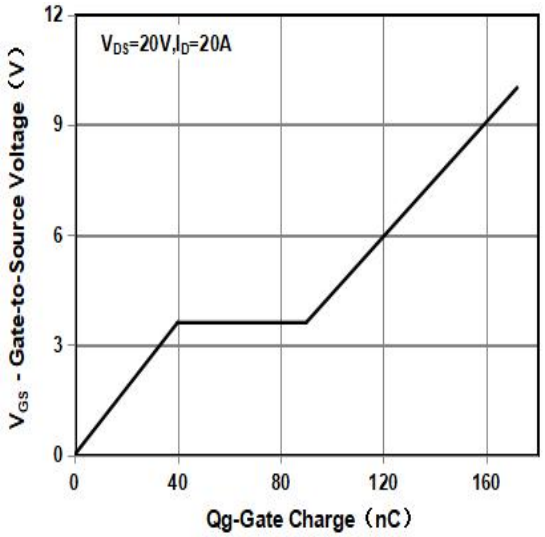

Gate Charge Waveform

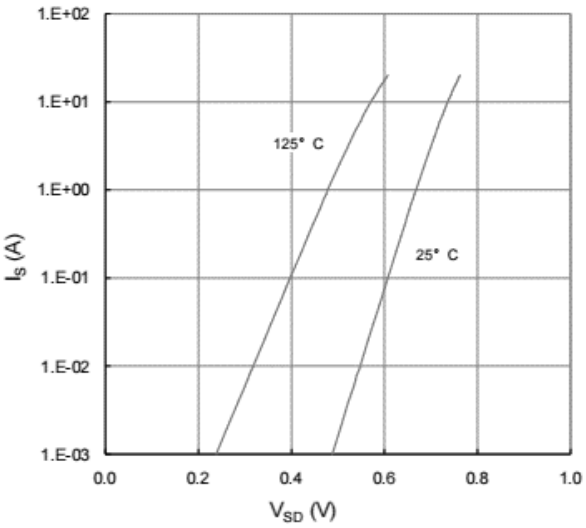

Source-Drain Diode Forward Voltage

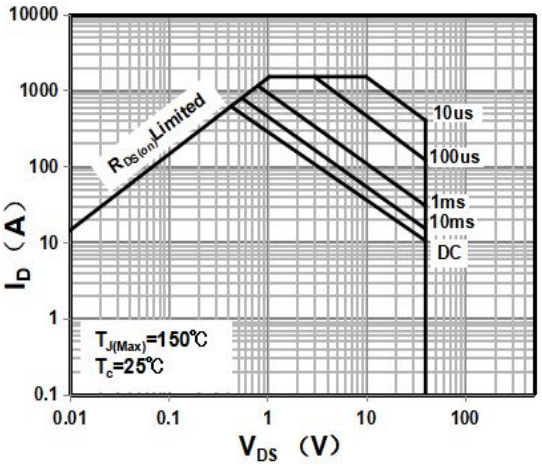

Maximum Safe Operating Area

Note： The above characteristics curves are presented for reference only and not guaranteed by production test, unless otherwise noted.

■ Test Circuit & Waveform

Gate Charge Test Circuit & Waveform

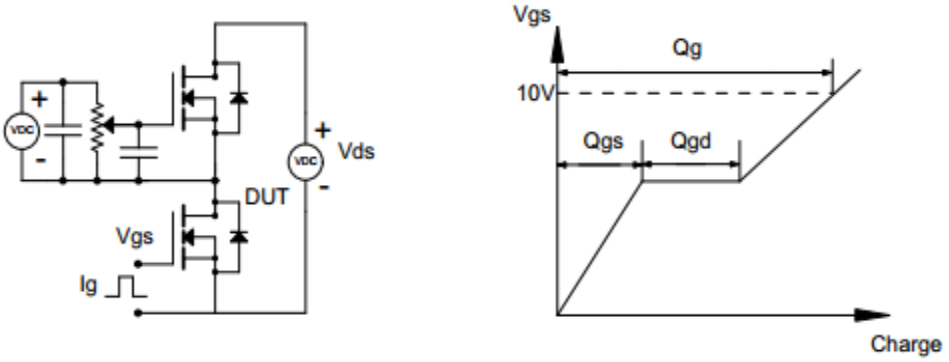

Resistive Switching Test Circuit & Waveform

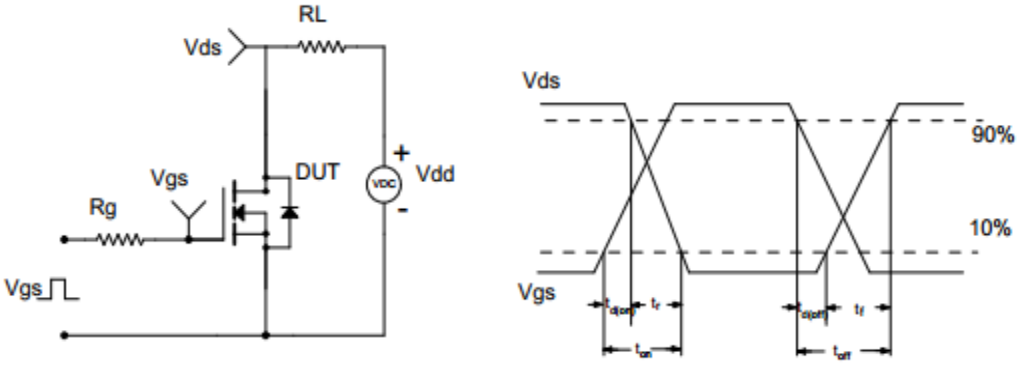

Unclamped Inductive Switching (UIS) Test Circuit & Waveform

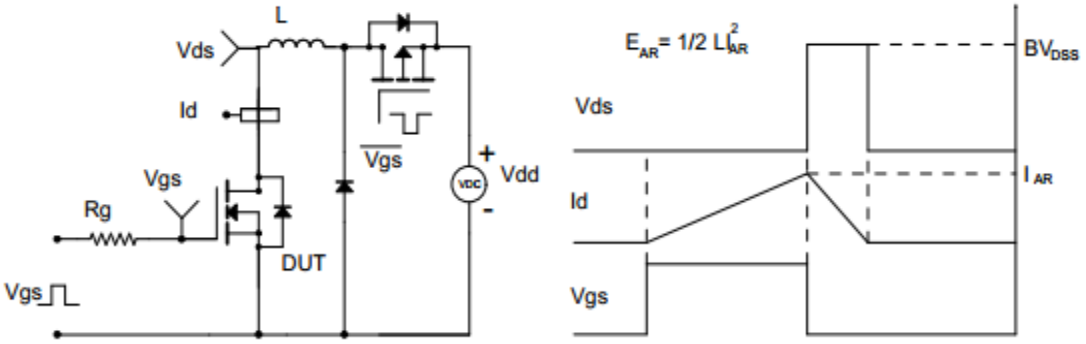

■ TOLL Package Dimensions

Unit：mm
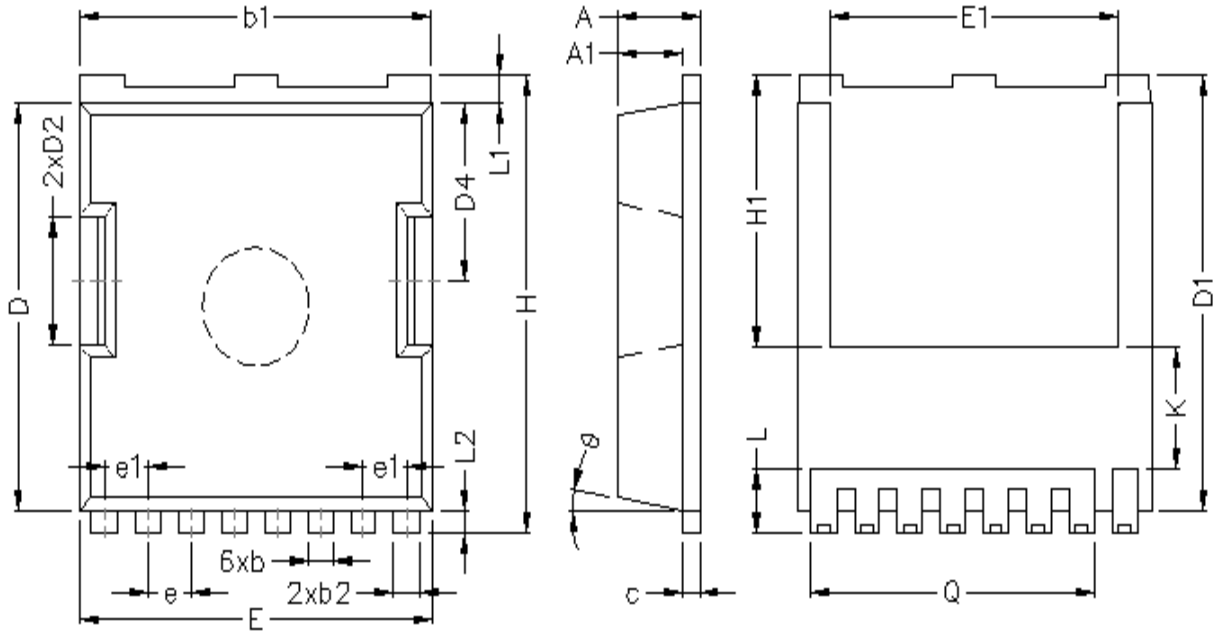
Symbol	Min	Nom	Max	Symbol	Min	Nom	Max
A	2.25	2.3	2.35	e1		1.225	
A1	1.75	1.8	1.85	E	9.85	9.9	9.95
b	0.65	0.7	0.75	E1	8	8.1	8.2
b1	9.75	9.8	9.85	H	11.6	11.7	11.8
b2	0.7	0.75	0.8	H1		6.95	
c	0.45	0.5	0.55	K		3.1	
D	10.35	10.4	10.45	L	1.55	1.65	1.75
D1	11	11.1	11.2	L1	0.65	0.7	0.75
D2	3.25	3.3	3.35	L2	0.5	0.6	0.7
D4	4.5	4.55	4.6	Q		7.95	
e		1.2		θ		10°