MC240R50C

MOSFETs Silicon 500V N-Channel MOS

Applications

- Power factor correction（PFC）
- Switched mode power supplies(SMPS)
- Uninterruptible Power Supply（UPS）

Product Summary

V_{DS} @ Tj,max	550	V
I_D	15	A
$R_{DS(ON)}$,Typ@10V	0.2	Ω
Q_g	20	nC

Features

- Multi-Epi process SJ-FET
- Low $R_{DS(ON)}$
- Ultra Low Gate Charge
- 100% UIS and RG Tested

TO-220

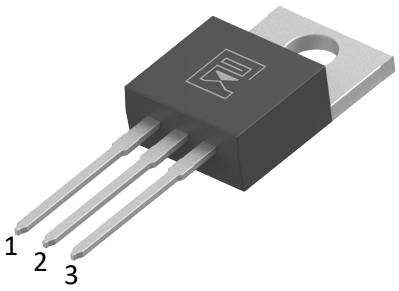

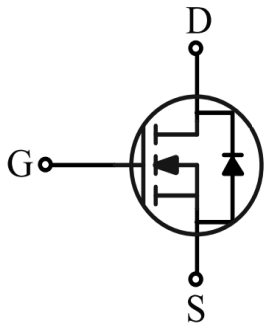

Gate： 1

Drain： 2

Source： 3

Package Marking and Ordering Information

Ordering code	Marking	Package	Packaging	Min. package quantity
MC240R50C	MC240R50C	TO-220	Tube	1000

Absolute Maximum Ratings（Tc=25℃ unless otherwise noted)

Parameter			Symbol	Ratings	Unit
Drain-Source Voltage			V_{DS}	500	V
Gate-Source Voltage			V_{GS}	±30	V
Continuous Drain Current	Tc=25℃	(Note 1)	I_D	15	A
Continuous Drain Current	Tc=100℃	(Note 1)		9	
Drain Current-Pulsed		(Note 1)	I_{DM}	43	A
Total Dissipation			P_D	125	W
Junction Temperature			T_j	150	℃
Storage Temperature			T_{stg}	-55-150	℃
Single Pulse Avalanche Energy		(Note 2)	E_{AS}	284	mJ

Note: Using continuously under heavy loads (e.g. the application of high temperature/current/voltage and the significant change in temperature, etc.) may cause this product to decrease in the reliability significantly even if the operating conditions (i.e. operating temperature/current/voltage, etc.) are within the absolute maximum ratings.

Thermal Characteristics

Parameter	Symbol	Max	Unit
Maximum Junction-to-Case	$R_{\theta JC}$	1	℃/W
Maximum Junction-to-Ambient	$R_{\theta JA}$	60	℃/W

Note 1：Ensure that the channel temperature does not exceed 150℃.

Note 2：V_{DD}=50V, T_{ch}= 25℃(initial), I_{AS}=18A, R_g=25Ω.

Note：This transistor is sensitive to electrostatic discharge and should be handled with care.

Electrical Characteristics（Tc=25℃ unless otherwise noted)

Parameter	Symbol	Test Condition		Min	Typ	Max	Unit
Static Parameters							
Drain-Source Breakdown Voltage	BV_{DSS}	V_{GS}=0V,I_D=250uA		500	-	-	V
			Tj=150°C	550	-	-	
Drain-Source Leakage Current	I_{DSS}	V_{DS}=500V,V_{GS}=0V		-	-	1	uA
Gate-Body Leakage Current	I_{GSS}	V_{GS}=±30V,V_{DS}=0V		-	-	±100	nA
Gate Threshold Voltage	$V_{GS(TH)}$	V_{GS}=V_{DS},I_D=250uA		2.5	3.5	4.5	V
Drain-Source On Resistance	$R_{DS(ON)}$	V_{GS}=10V,I_D=9A		-	0.20	0.24	Ω
			Tj=150°C	-	0.54	-	
Dynamic Characteristics							
Input Capacitance	C_{iss}	V_{DS}=25V,V_{GS}=0V, f=1.0MHz		-	815	-	pF
Output Capacitance	C_{oss}			-	350	-	pF
Reverse Transfer Capacitance	C_{rss}			-	10	-	pF
Gate Resistance	R_g	V_{DS}=0V,V_{GS}=0V, f=1.0MHz		-	3.8	-	Ω
Switching Paramters							
Turn-On Delay Time	$t_{d(on)}$	V_{DS}=400V,I_D=9A, V_{GS}=10V,R_G=25Ω		-	13	-	ns
Turn-On Rise Time	t_r			-	12	-	ns
Turn-Off Delay Time	$t_{d(off)}$			-	100	-	ns
Turn-Off Fall Time	t_f			-	12	-	ns
Total Gate Charge	Q_g	V_{DS}=400V,I_D=9A, V_{GS}=10V		-	20	-	nC
Gate-Source Charge	Q_{gs}			-	5	-	nC
Gate-Drain Charge	Q_{gd}			-	7.5	-	nC
Source-Drain Characteristics							
Max. Diode Forward Cuurent	I_S			-	-	18	A
Max. Pulsed Forward Cuurent	I_{SM}			-	-	43	A
Diode Forward Voltage	V_{sd}	V_{GS}=0V,I_S=9A		-	0.9	1.5	V
Reverse Recovery Time	t_{rr}	V_R=400V,I_F=9A, di/dt=100A/us		-	340	-	ns
Reverse Recovery Charge	Q_{rr}			-	4.5	-	μC

Characteristics Curves

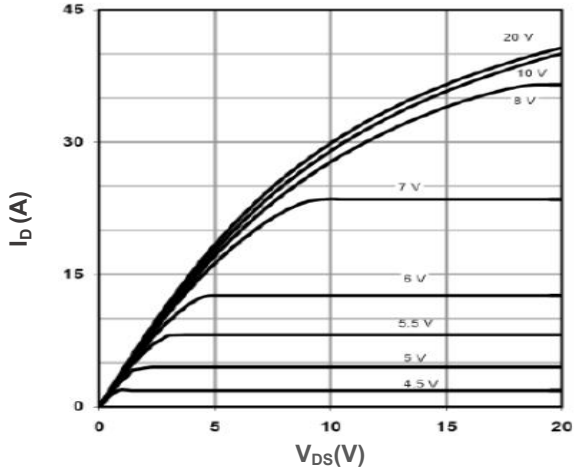

Output Characteritsics

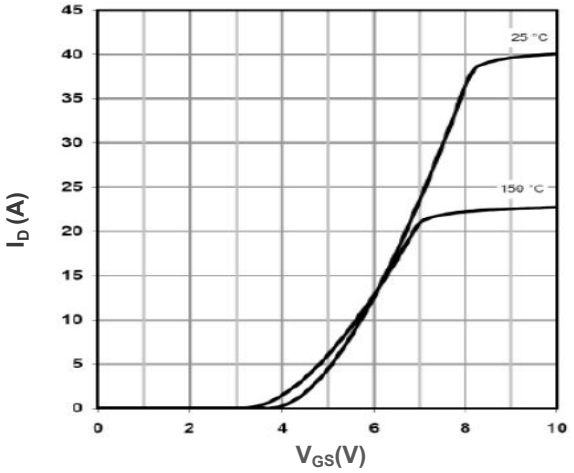

Transfer Characteritsics

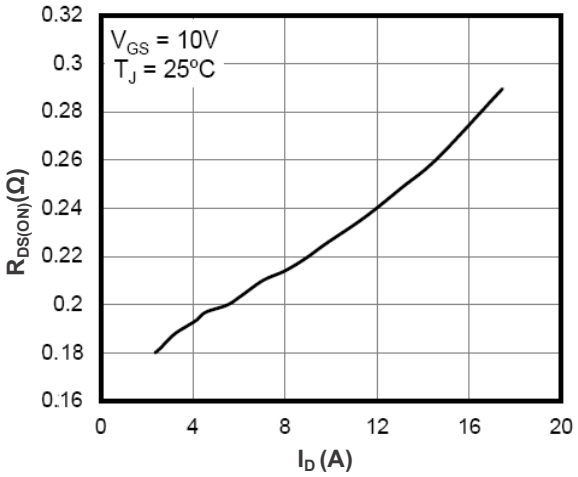

On Resistance Vs Drain Current

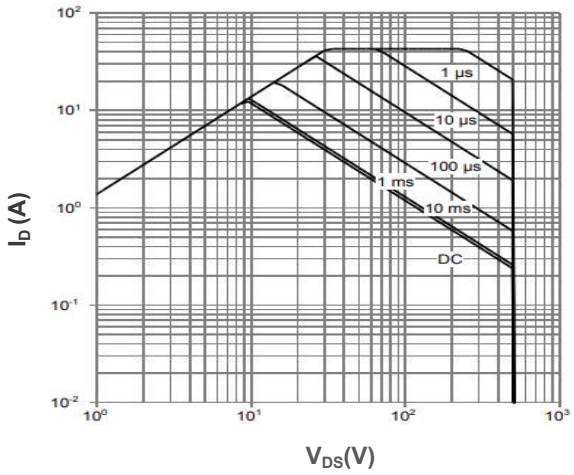

Maximum Safe Operating Area

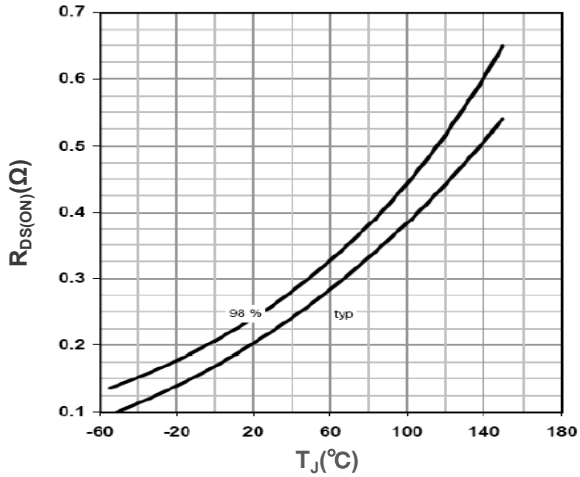

Rdson-JunctionTemperature

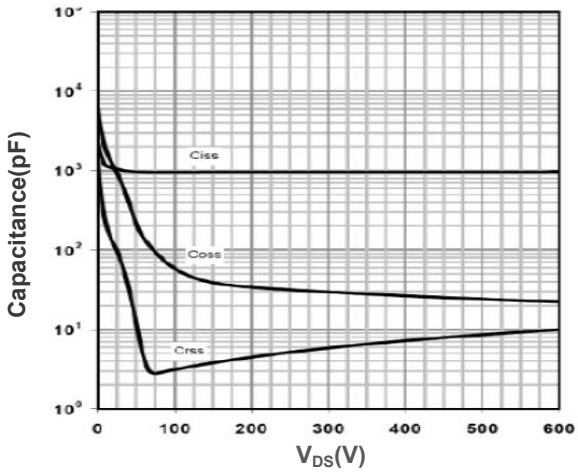

Capacitance

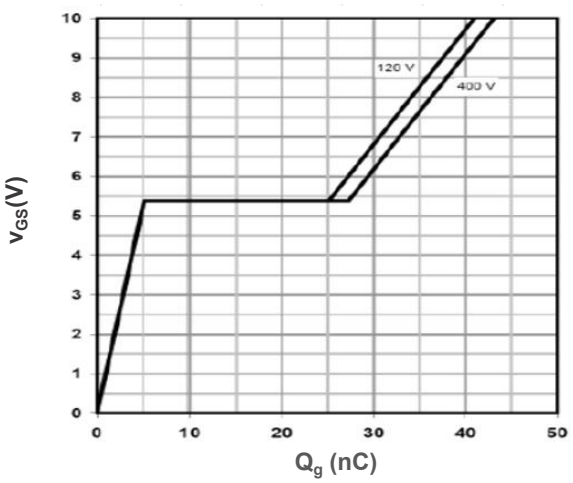

Gate Charge Waveform

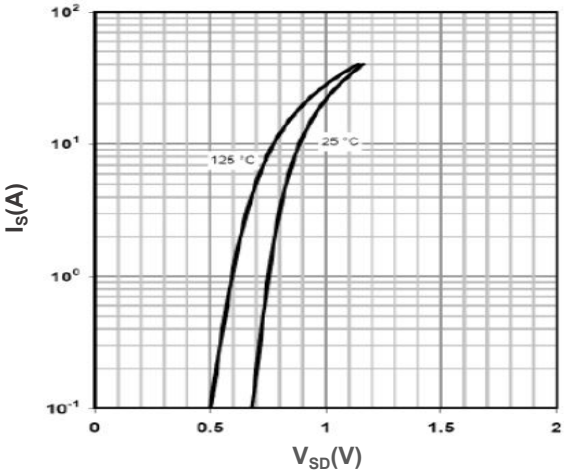

Source-Drain Diode Forward Voltage

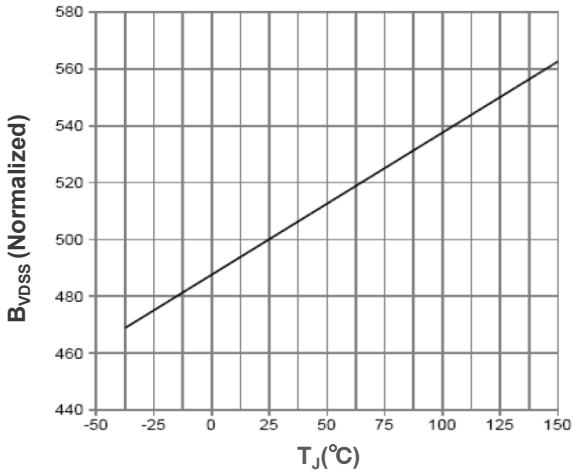

Breakdown Voltage Vs Junction Temperature

Note： The above characteristics curves are presented for reference only and not guaranteed by production test, unless otherwise noted.

Test Circuit & Waveform

Gate Charge Test Circuit & Waveform

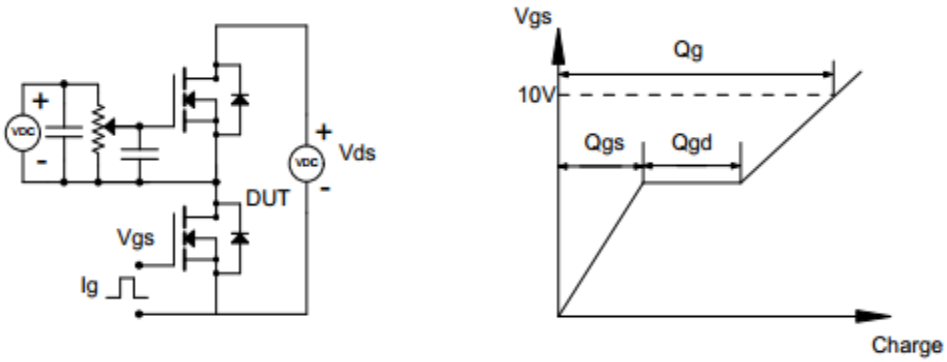

Resistive Switching Test Circuit & Waveform

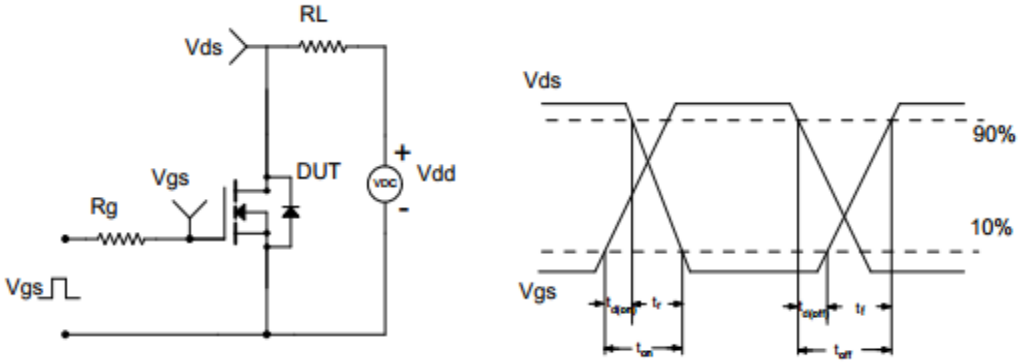

Unclamped Inductive Switching (UIS) Test Circuit & Waveform

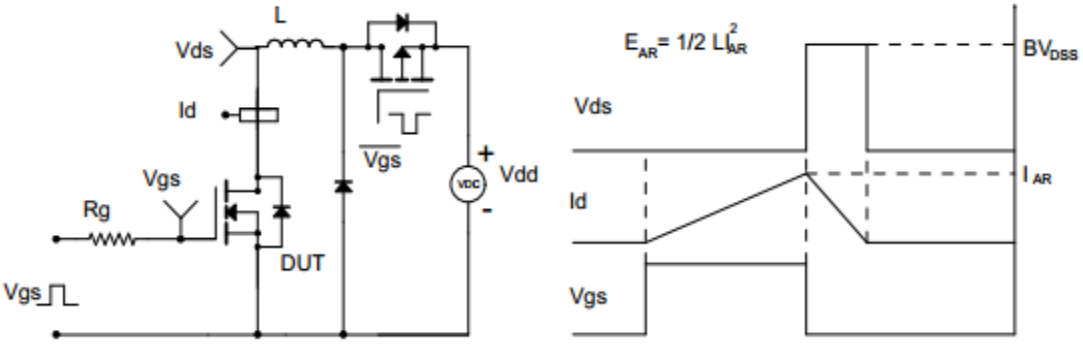

TO-220 Package Dimensions

Unit：mm
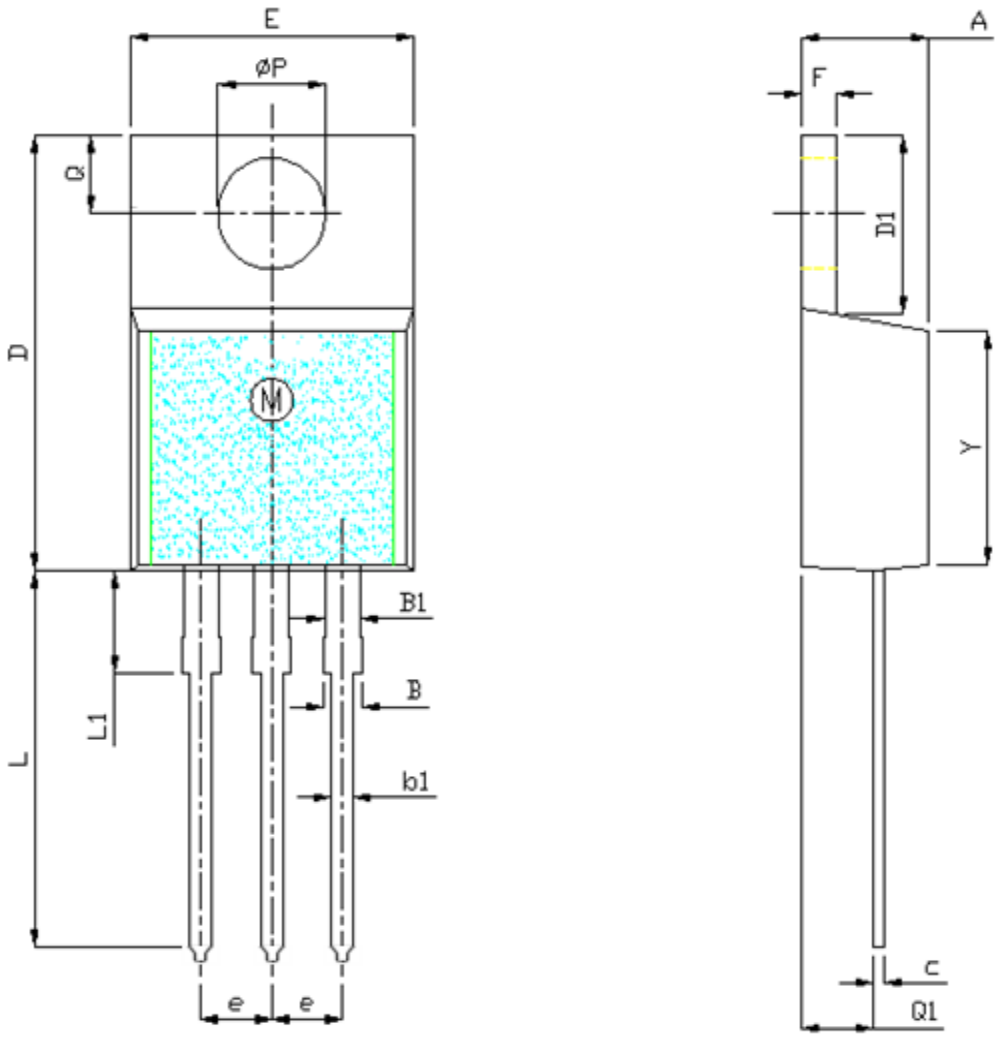
Symbol	Min	Nom	Max	Symbol	Min	Nom	Max
A	4.00		4.80	e	2.44	2.54	2.64
B	1.20		1.40	F	1.10		1.40
B1	1.00		1.40	L	12.50		14.50
b1	0.75		0.95	L1	3.00	3.50	4.00
c	0.40		0.55	ΦP	3.70	3.80	3.90
D	15.00		16.50	Q	2.50		3.00
D1	5.90		6.90	Q1	2.00		2.90
E	9.90		10.70	Y	8.02	8.12	8.22